Renova 45

Model Ref. 272145
Material: Vitreous china
Color: White/ unfinished back wall
Installation: Wall-mount, or above-the-counter/ drop-in
Overall Dimensions: 17.7" L x 12.6" W x 6.9" H
Interior Dimensions (basin area): 15.4" L x 7.7" W x 4.9" H
Foot print: 17" L x 12"
Suggested sink cutout*: 13.4" L x 10.6" W
Drain hole: Ø1.8" Interior Diameter
Faucet hole: Ø1-3/8"
Approx. weight: 22 lbs
Features: With overflow and one faucet hole
Included components: Wall-mounting fixing bolts kit
Recommended accessories (not included): Oversized European drain, e.g. Clicker Drain Ref. 360551

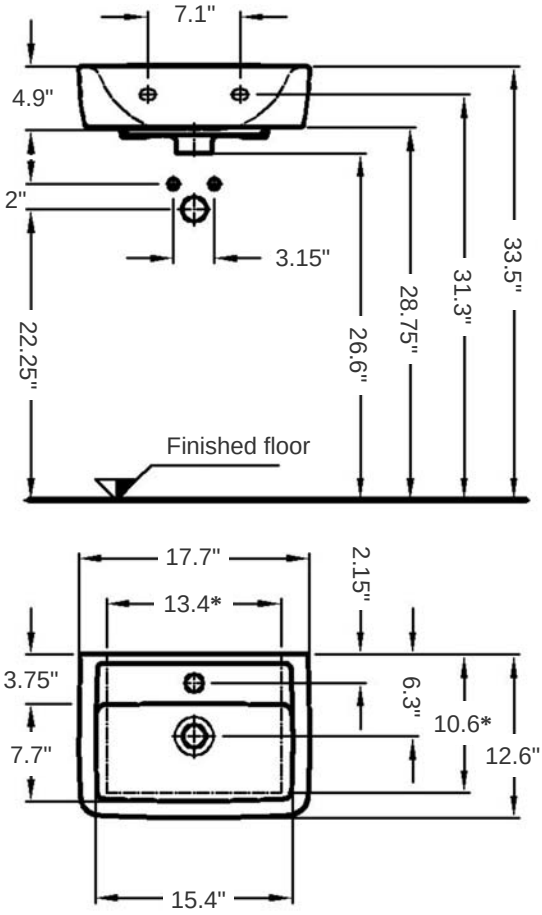

All dimensions are nominal

Faucet and drain fittings not included. Shown only for photographic purposes

BISSONNET

Tel. (610) 454-1295 · Fax (610) 454-9385 · info@bissonnet.net · www.bissonnet.net